SPECIFICATIONS

aquavit

Features

- Solid lead-free brass valve for durability and reliability
- Spain Citec ceramic cartridge ensures life-long trouble free service
- Swiss Neoperl aerator for a soft and splash-free stream
- Single handle design for smooth operation with effortless temperature and flow control
- Smart connector for an easy spout installation
- Corrosion resistant finish will not fade or tarnish over time
- Standard plumbing 1/2" connections for easy installation

Codes and standards

- cUPC(ASME A112.18.1/CSA B125.1)
- NSF/ANSI 61
- NSF/ANSI 372
- CE(EN817:2008)
- WaterMark(AS/NZS 3718:2005)

Warranty

- Limited Lifetime Faucet Warranty against material and manufacturing defects for residential use.
- 2 Year Limited Warranty on all industrial, commercial and business applications.

Wall concealed single lever basin mixer
Model: AT080015

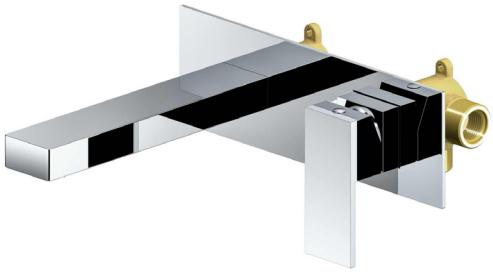

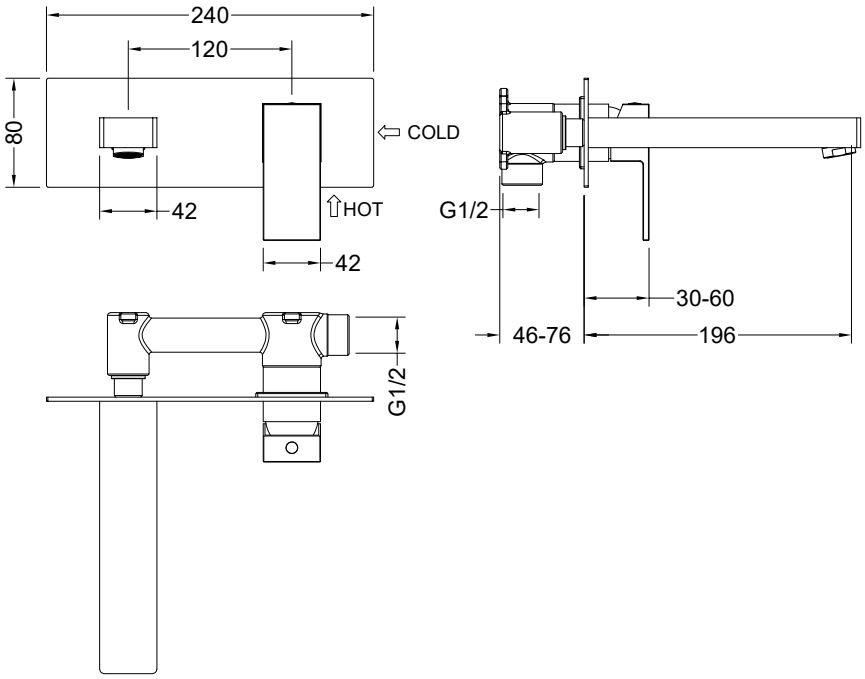

Jichang industry area, Zhishan Town, Heshan City, Guangdong, China, 529729
Tel: +86-757-28104657 W: www.aquavitbath.com