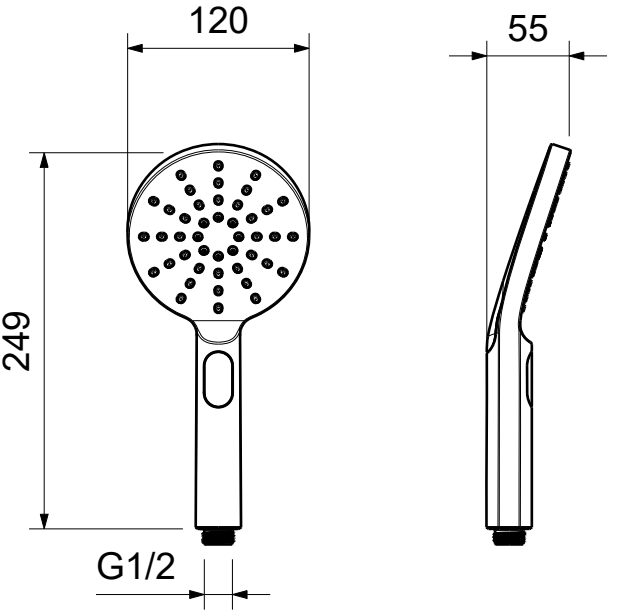
120
55
249
G1/2